EUPB0110(Product No.: 500500000101)

Product Feature

Thanks for using EUPB0110. This product is mainly used to amplify the power when the load capacity of TRIAC knob or dimming device isn't enough. For example, a brand dimmer C output 4 channel leading edge or trailing edge, and the maximum current is 1A/ch.If load current of one channel is larger than 1A, you need to increase the purchase of C or greater power product to meet the requirements, this will increase the cost a lot, you can choose the combination of C+EUPB0110 to amplify the power, which can significantly reduce the cost and facilitate clients to stock up.

Product Feature

- Receive leading/trailing edge signal of 100-240VAC
- Single channel leading edge output, the maximum output current of 10A
- Standard 35mm din rail, easy to install
- Can be connected to incandescent lamp, halogen lamp, TRIAC dimming driver
- Mainly used to enlarge the load capacity, when triac knob or phase cut dimming module used in lighting Control system don't have enough capacity

Technical Parameters

Model	EUPB0110	
Input	Voltage	100VAC-240VAC
	Signal	100-240VAC leading/trailing edge signal
	Channels of signal	1
Output	Current/Voltage	10A/ch/100-240VAC leading edge
	Channel	1
Others	Working Temp.	-20°C~50°C
	Storage Temp.; Humidity	-40°C~85°C, 20-90%RH
	N.W	700g
	Dimension	175*93.4*63.2mm(L*W*H), standard 35mm din rail

Dimension(mm)

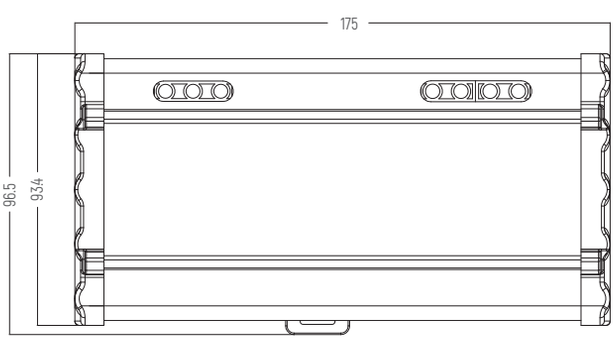

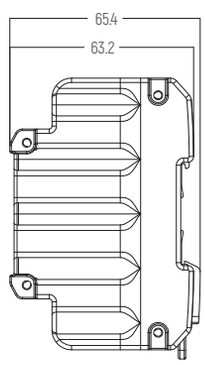

Wiring Diagram

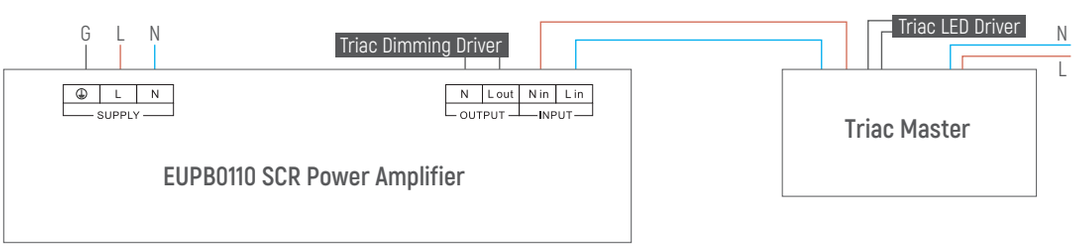

Note: Regardless of the input signal is the leading edge or the trailing edge, EUPB0110 output signal is the leading edge, please note the consistency of the other loop (if any) of the original dimmer.

※The contents of this manual are updated without prior notice. If the function of the product you are using is inconsistent with the instructions, the function of the product shall prevail.Please contact us if you have any questions.

EUPB0110(产品代码: 500500000101)

概述

此产品主要用于在可控硅调光旋钮或调光器带载功率不够的情况下放大带载功率。如某品牌调光器C为4路，每路1A的调光器，如果在实际应用中其中一路的负载较大超过了1A, 那么需要增加购买C或功率更大的产品, 这样做增加了很多成本,可以考虑使用C+EUPB0110这款功率放大器来放大C负载功率不够的那一路的功率，显著降低了成本并方便客户备货。

产品特点

·自适应 100-240V 前沿/后沿切相信号
·输出单路 AC 前沿切相，最大输出电流 10A
·标准 35mm 导轨外壳，方便安装
·可以对白炽灯，卤素灯，LED 可控硅调光灯具或电源进行调光
·主要用来提高可控硅调光旋钮及灯光控制系统中切相调光模块的带载容量

技术参数

型号	EUPB0110	
输入	电压	100-240VAC
	输入信号	100-240VAC前沿/后沿切相信号
	输入信号通道数	1
输出	电流/电压	10A/通道/100-240VAC前沿切相
	通道数	1
其它	工作温度	-20°C~50°C
	储存温度、湿度	-40°C~85°C, 20-90%RH
	净重	700g
	尺寸	175*93.4*63.2mm(长*宽*高), 标准 35mm导轨安装

产品尺寸

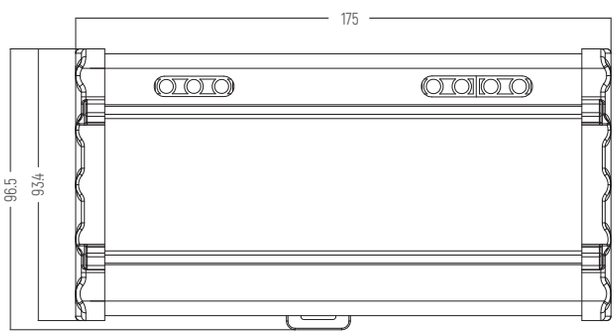

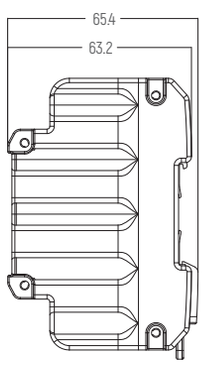

应用接线图

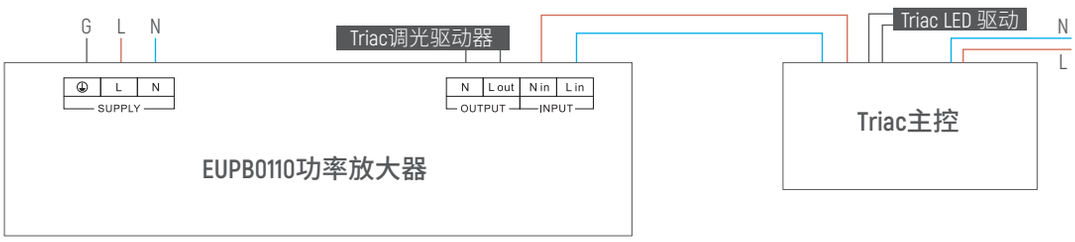

备注：不论输入信号是前沿还是后沿，EUPB0110 都转换成前沿信号输出,请注意和原调光器其他回路(如有)的一致性问题。

※本说明书内容如有更新，恕不另行通知。若您使用的产品功能与说明书不一致时，请以产品为准。如有疑问请与我们联系。